TABLE OF DIMENSIONS & REINFORCING STEEL
(Wings for One Structure End)

Dimensions					Variable Reinforcing				Estimated Quantities per ft of wing length (2~Wings) (3)	
					Bars J1		Bars J2			
Maximum Wingwall Height Hw	W	X	Y	Z	Size	Spa	Size	Spa	Reinf (Lb/Ft)	Conc (CY/Ft)
2'-6"	2'- 5"	1'- 0"	9"	7"	#4	1'-0"	#4	1'-0"	33.73	0.248
3'-0"	2'- 5"	1'- 0"	9"	7"	#4	1'-0"	#4	1'-0"	37.07	0.261
3'-6"	2'- 5"	1'- 0"	9"	7"	#4	1'-0"	#4	1'-0"	37.74	0.273
4'-0"	2'- 5"	1'- 0"	9"	7"	#4	1'-0"	#4	1'-0"	38.41	0.285
4'-6"	3'- 2"	1'- 6"	1'- 0"	7"	#4	1'-0"	#4	1'-0"	41.75	0.330
5'-0"	3'- 2"	1'- 6"	1'- 0"	7"	#4	1'-0"	#4	1'-0"	45.09	0.343
5'-6"	3'- 2"	1'- 6"	1'- 0"	7"	#4	1'-0"	#4	1'-0"	45.75	0.355
6'-0"	3'- 2"	1'- 6"	1'- 0"	7"	#4	1'-0"	#4	1'-0"	46.42	0.367
7'-0"	3'- 8"	1'- 9"	1'- 3"	7"	#4	1'-0"	#4	1'-0"	52.77	0.414
8'-0"	4'- 2"	2'- 0"	1'- 6"	8"	#5	1'-0"	#4	1'-0"	60.19	0.486
9'-0"	4'- 8"	2'- 3"	1'- 9"	8"	#4	6"	#4	6"	81.49	0.535
10'-0"	5'- 2"	2'- 6"	2'- 0"	8"	#5	6"	#4	6"	97.25	0.584
11'-0"	5'- 8"	2'- 9"	2'- 3"	8"	#6	6"	#5	6"	133.65	0.634
12'-0"	6'- 2"	3'- 0"	2'- 6"	9"	#7	6"	#5	6"	162.29	0.721
13'-0"	6'- 8"	3'- 3"	2'- 9"	11"	#7	6"	#5	6"	178.80	0.856
14'-0"	7'- 2"	3'- 6"	3'- 0"	1'- 0"	#8	6"	#5	6"	216.78	0.959
15'-0"	7'- 8"	4'- 0"	3'- 0"	1'- 1"	#9	6"	#6	6"	283.06	1.068
16'-0"	8'- 2"	4'- 6"	3'- 0"	1'- 3"	#9	6"	#6	6"	297.02	1.234

TABLE OF WINGWALL REINFORCING (2~Wings)

Bar	Size	No.	Spa
D	#5	~	1'-0"
E	#4	~	1'-0"
F	#4	~	1'-0"
G	#6	4	~
M	#4	4	~
P	#4	~	1'-0"
R	#5	6	~
V	#4	~	1'-0"

TABLE OF ESTIMATED CULVERT TOEWALL QUANTITIES

Bar	Size	No.	Spa
L	#4	~	1'-6"
Q	#4	1	~
Reinf (Lb/Ft)			2.45
Conc (CY/Ft)			0.037

WING DIMENSION CALCULATIONS:

Formulas: (All values are in Feet)

Hw = H + T + C − 0.250'

A = (Hw − 0.333') (SL)

B = (A) Tangent (30°)

Lw = (A) ÷ Cosine (30°)

For Cast-in-place culverts:

Ltw = (N) (S) + (N + 1) (U)

For Precast culverts:

Ltw = (N) (2U + S) + (N − 1) (0.500')

Total Wingwall Area (Two Wings ~ S.F.) = (Hw + 0.333') (Lw)

Hw = Height of Wingwall
SL:1 = Side Slope Ratio (Horizontal:1 Vertical)
Lw = Length of Wingwall
Ltw = Culvert Toewall Length
N = Number of Culvert Spans

See applicable box culvert standard for H, S, T, and U values.

1. Extend Bars P 3'-0" minimum into bottom slab of Box Culvert.
2. Adjust to fit as necessary to maintain 1 ¼" clear cover and 4" minimum between bars.
3. Quantities shown are based on an average wing height for two wings (one structure end). To determine total quantities for two wings multiply the tabulated values by Lw.
4. Recommended values of Slope are: 2:1, 3:1, 4:1, & 6:1.
5. When shown elsewhere on the plans, a 5" deep concrete riprap shall be constructed. Payment for riprap shall be as required by Item 432, "Riprap". Unless otherwise shown on the plans or directed by the Engineer, the riprap shall have a 6" wide by 1'-6" deep reinforced concrete toewall along all edges adjacent to natural ground; the toewall shall be reinforced by extending typical riprap reinforcing into the toewall; construction joints or grooved joints, oriented in the direction of flow, shall extend across the full distance of the riprap, at intervals of approximately 20'. When such riprap is provided, the culvert toewall shown in SECTION B-B will not be required.
6. At Contractor's option, Culvert Toewall may be ended flush with Wingwall Toewall. Adjust reinforcing from that shown as necessary.
7. 0" min to 5'-0" max. Estimated curb heights are shown elsewhere in the plans. For structures with pedestrian rail, bicycle rail or curbs taller than 1'-0", refer to ECD standard. For structures with T6 bridge rail, refer to T6-CM standard. For structures with traffic rail, other than T6, refer to RAC standard.
8. For vehicle safety, curb heights and wall heights shall be reduced, if necessary, to provide a maximum 3" projection above finished grade. No changes will be made in quantities and no additional compensation will be allowed for this work.

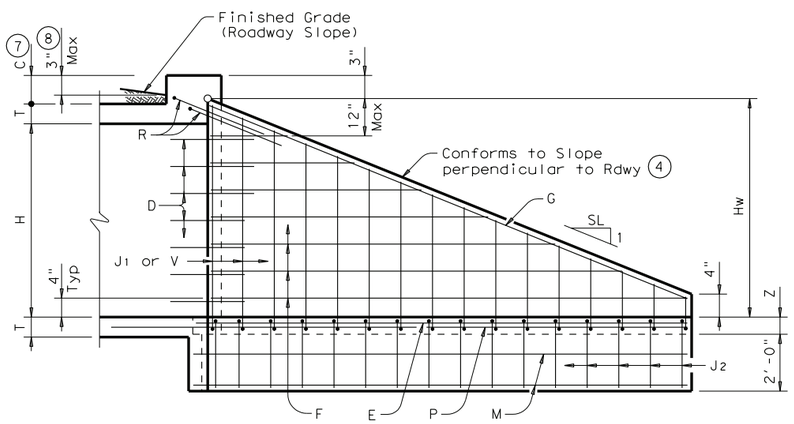

INSIDE ELEVATION

(Showing reinforcing. Culvert and Culvert Toewall reinforcing not shown for clarity.)

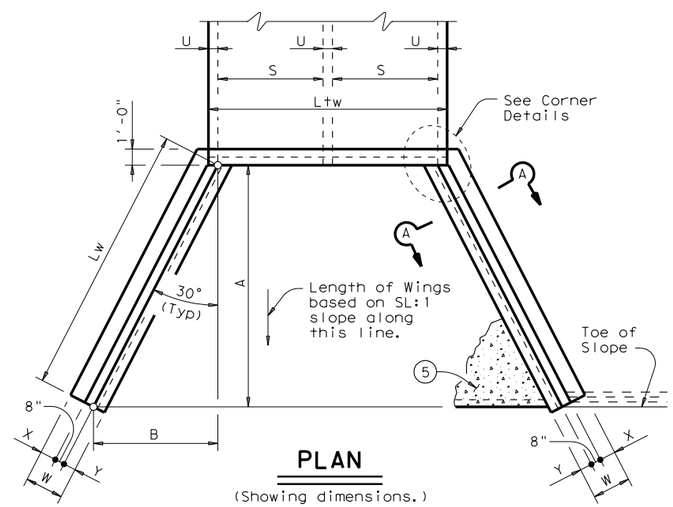

PLAN

(Showing dimensions.)

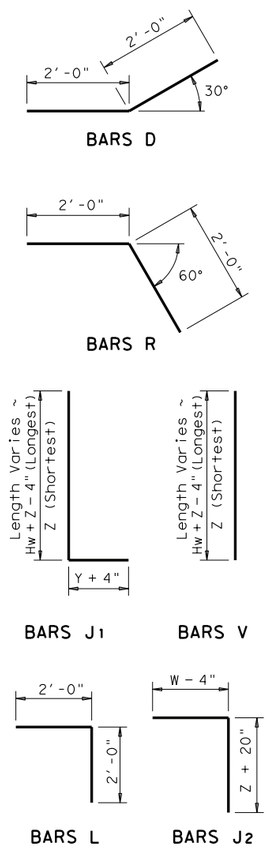

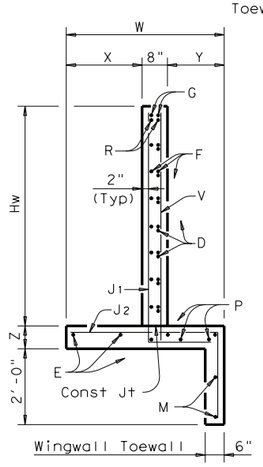

SECTION A-A

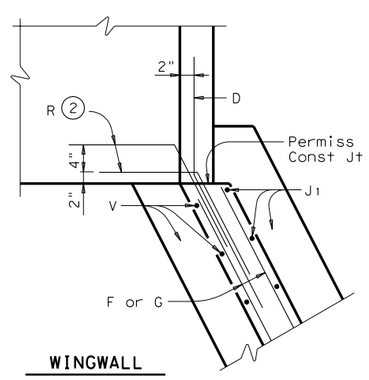

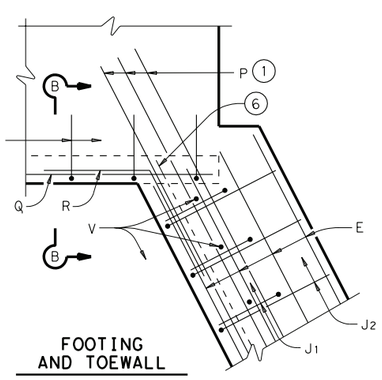

CORNER DETAILS

(Culvert and Culvert Toewall reinforcing not shown for clarity.)

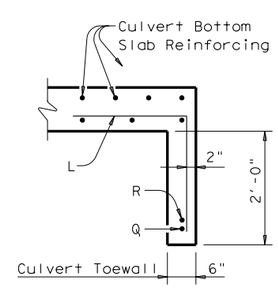

SECTION B-B (5)

GENERAL NOTES:

Designed according to AASHTO LRFD Specifications.
All reinforcing steel shall be Grade 60.
All concrete shall be Class "C" and shall have a minimum compressive strength of 3600 psi.
All reinforcing bars shall be adjusted to provide a minimum of 1 ¼" clear cover.
When structure is founded on solid rock, depth of toewalls for culverts and wingwalls may be reduced or eliminated as directed by the Engineer.
See BCS sheet for additional dimensions and information.
The quantities for concrete and reinforcing steel resulting from the formulas given on this sheet are for Contractor's information only.

DISCLAIMER:
The use of this standard is governed by the "Texas Engineering Practice Act". No warranty of any kind is made by TxDOT for any purpose whatsoever. TxDOT assumes no responsibility for the conversion of this standard to other formats or for incorrect results or damages resulting from its use.

COMMENTS:

LEVELS DISPLAYED

Texas Department of Transportation
Bridge Division

CONCRETE WINGWALLS WITH FLARED WINGS FOR 0° SKEW BOX CULVERTS

FW-0

FILE: fw-0stde.dgn	DN: GAF	CK: CAT	DW: TxDOT	CK: GAF
©TxDOT February 2010	DISTRICT	FEDERAL AID PROJECT		SHEET
REVISIONS				
	COUNTY	CONTROL	SECT	JOB	HIGHWAY